SL-100X30x

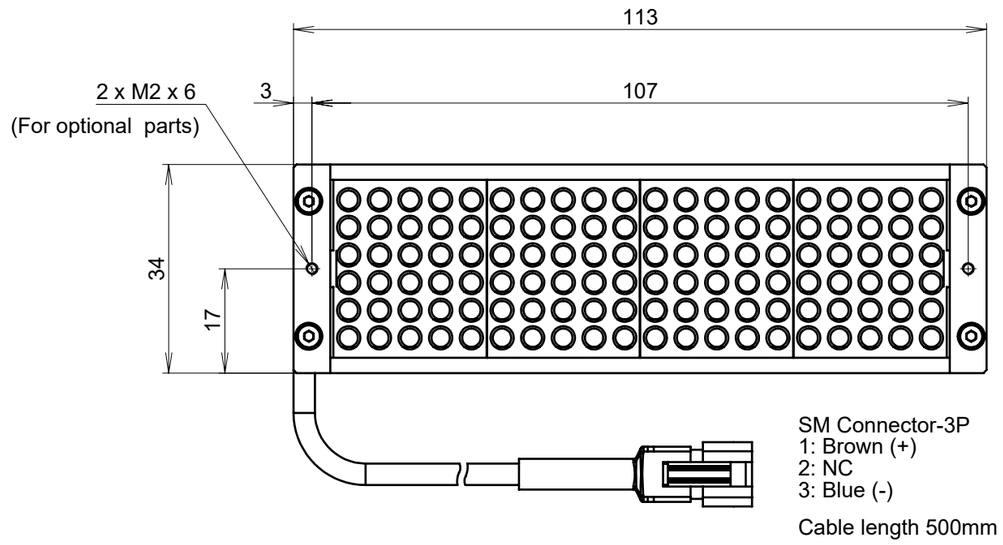

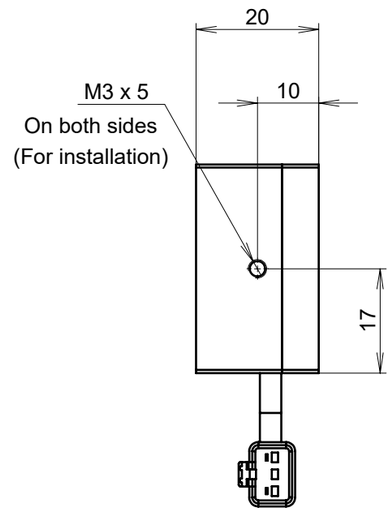

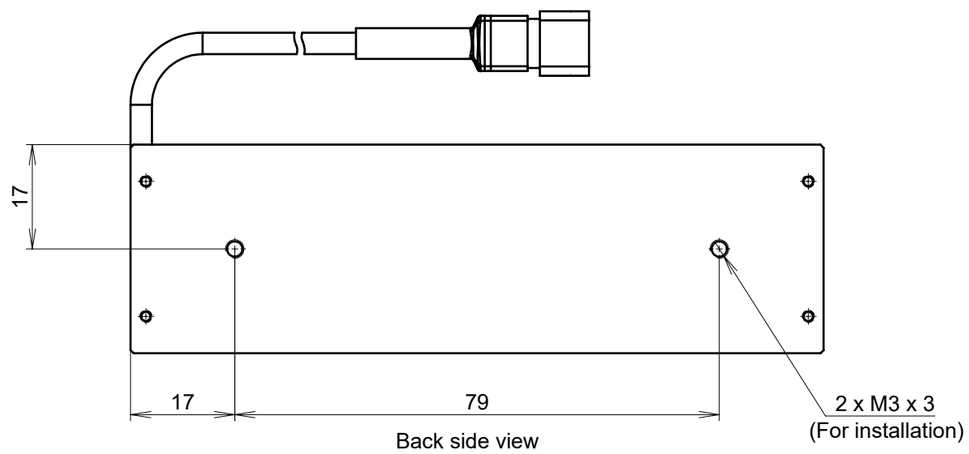

Copyright(C) 2015 CCS Asia PTE LTD. All rights reserved.
Reproduction or photocopy without permission is prohibited.

Input Voltage: DC 24V
Power Consumption: 6.1W (R,G,B,IR)
8.1W (W)